RDH E_-0180

Performance certified is for installation type B - free inlet, ducted outlet.
Power rating (kW) does not include transmission losses.
Performance ratings do not include the effects of appurtenances (accessories).

Technical Data

Impeller Data			
Impeller diameter	D_r	180	mm
Number of blades	z	8	
Moment of Inertia	J	0,003	kgm²

Impeller Data			
Impeller weight	m	0,62	kg
Density of media	ρ_1	1,2	kg/m³
Tolerance class (DIN 24166)		2	

Performance Curves

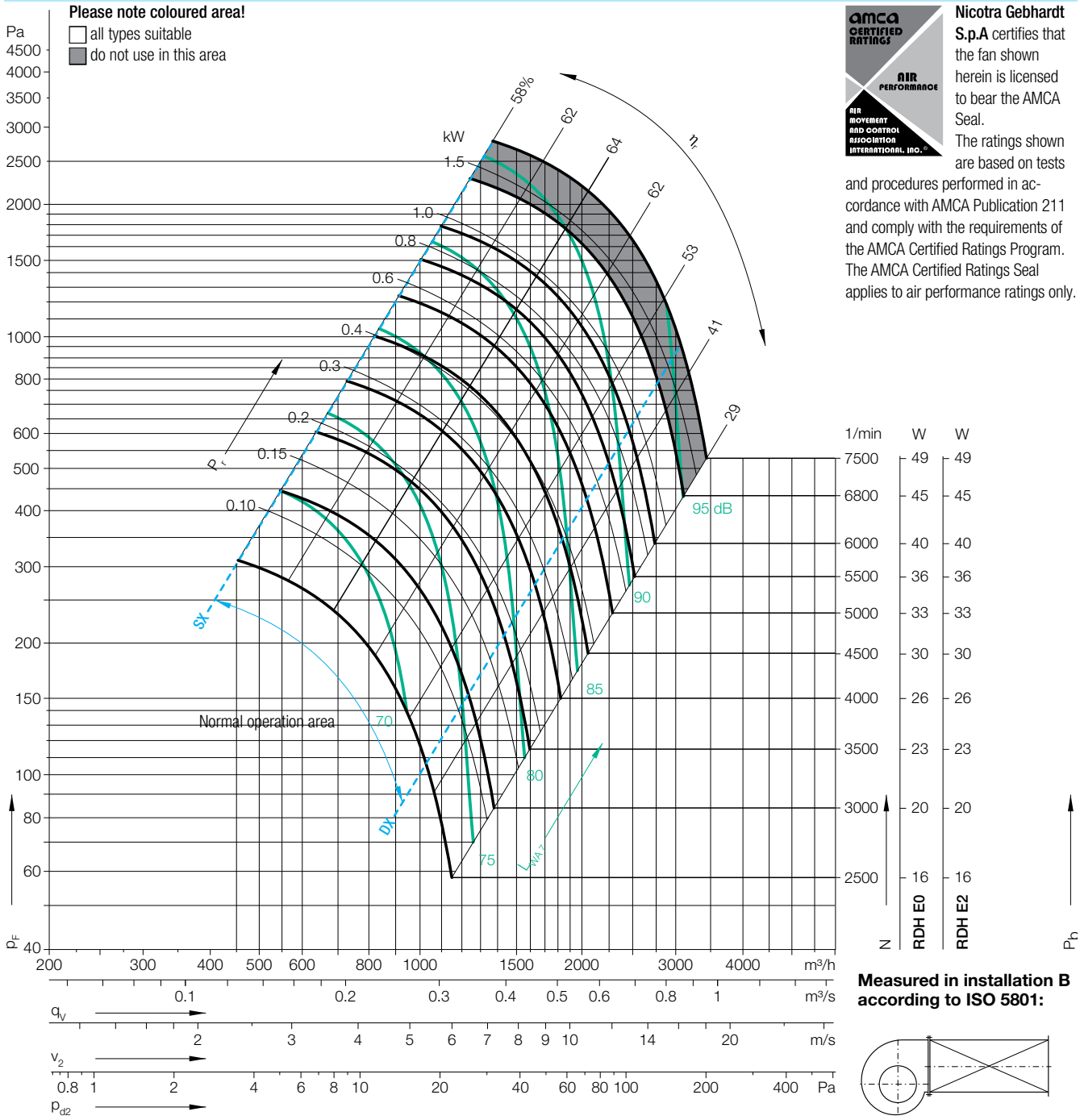

amca CERTIFIED RATINGS AIR PERFORMANCE AIR MOVEMENT AND CONTROL ASSOCIATION INTERNATIONAL, INC.

Nicotra Gebhardt S.p.A certifies that the fan shown herein is licensed to bear the AMCA Seal.
The ratings shown are based on tests and procedures performed in accordance with AMCA Publication 211 and comply with the requirements of the AMCA Certified Ratings Program. The AMCA Certified Ratings Seal applies to air performance ratings only.

Measured in installation B according to ISO 5801:

Duty point	Speed 1/min	$\Delta L_{Wrel4}(A)$ dB
SX	6000	4
SX	4500	3
SX	3000	2
$q_{V\,opt}$	6000	3
$q_{V\,opt}$	4500	2
$q_{V\,opt}$	3000	1
DX	6000	2
DX	4500	1
DX	3000	1

Relative sound power level for inlet side L_{Wrel7} at octave centre frequencies f_c

63	125	250	500	1000	2000	4000	8000	Hz
-14	-6	-2	-5	-5	-6	-11	-17	dB
-9	-2	-3	-3	-5	-8	-12	-18	dB
-3	0	-3	-3	-4	-9	-15	-21	dB
-17	-8	-3	-5	-6	-5	-12	-17	dB
-11	-4	-3	-4	-4	-8	-13	-18	dB
-5	-0	-3	-4	-3	-10	-15	-22	dB
-21	-11	-6	-4	-6	-5	-11	-16	dB
-15	-7	-5	-4	-4	-8	-12	-17	dB
-9	-4	-2	-4	-3	-9	-14	-21	dB

Relative sound power level for discharge side L_{Wrel4} at octave centre frequencies f_c

63	125	250	500	1000	2000	4000	8000	Hz
15	8	3	3	-5	-6	-10	-17	dB
16	5	5	2	-6	-6	-12	-19	dB
10	6	5	-3	-4	-8	-15	-22	dB
8	6	5	1	-7	-6	-12	-21	dB
10	6	5	0	-6	-7	-16	-22	dB
8	7	3	-5	-4	-10	-19	-25	dB
5	3	-2	1	-7	-6	-9	-19	dB
7	1	0	-1	-6	-6	-12	-21	dB
5	0	3	-5	-4	-7	-17	-26	dB

RDH E_-0180

Dimensions in mm, subject to change.

RDH E0-0180 5.3 kg

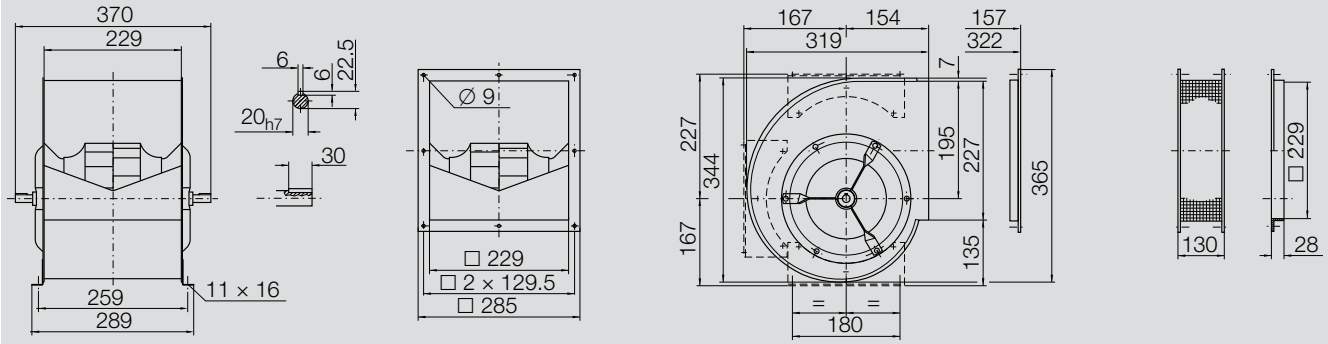
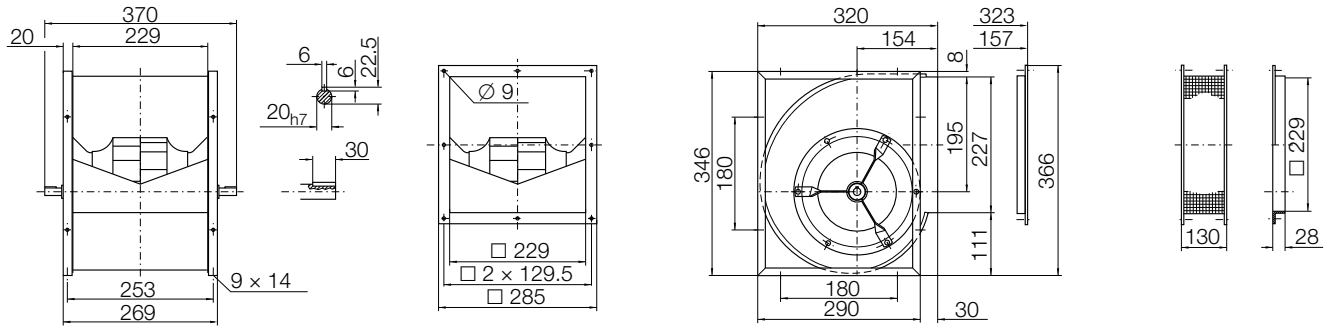
RDH E2-0180 7.1 kg